PROPRIETARY NOTICE: THIS DRAWING AND ALL INFORMATION THEREON IS THE PROPERTY OF COTTA TRANSMISSION COMPANY.
THIS DRAWING IS NOT TO BE COPIED OR USED FOR THE PURPOSE OF MANUFACTURING EXCEPT BY WRITTEN
CONSENT OF COTTA TRANSMISSION COMPANY.
TORSIONAL VIBRATIONS EXIST IN ALL ROTATING SYSTEMS. IT IS THE SOLE RESPONSIBILITY OF THE EQUIPMENT
MANUFACTURER OR ASSEMBLER TO INSURE THAT NO DAMAGING CRITICALS FALL IN THE OPERATING RANGE OF THE SYSTEM.

FORK ADJUSTMENT:

1. PRIOR TO CYLINDER ASSEMBLY, SHIFT ROD TO PUSH CLUTCH AGAINST GEAR SHOULDER. BACK SHIFT ROD AWAY FROM GEAR 0.19"

2. ROTATE SHIFT ROD IN FORK UNTIL A 0.12 OFFSET BETWEEN THE CYLINDER SPACER #44 & THE SHIFT ROD IS ACHIEVED (SHIFT ROD FACE BELOW SPACER FACE)

3. ROTATE ROD EITHER DIRECTION UNTIL THE FLAT IN THE ROD LINES UP WITH THE SETSCREW IN THE FORK. MAXIMUM ROTATION IS 45°.

4. TIGHTEN SETSCREW IN FORK TO NOTED TORQUE USING LOCTITE THREADLOCKER

ENGINEERING CHANGE NOTICES				
LTR	DESCRIPTION	ECN	DATE	BY
A	CHANGE TO NO GROOVE SHAFT, ADD SWITCH	11769	01-Feb-08	TAP
B	ADDED NOTE AND PLUG	11842	21-May-08	SJO
C	CHANGE AIR CYLINDERS + SWITCH NOTES	11911	05-Dec-08	TAP
D	ADD PLUG	12337	Sep-10-10	TAP

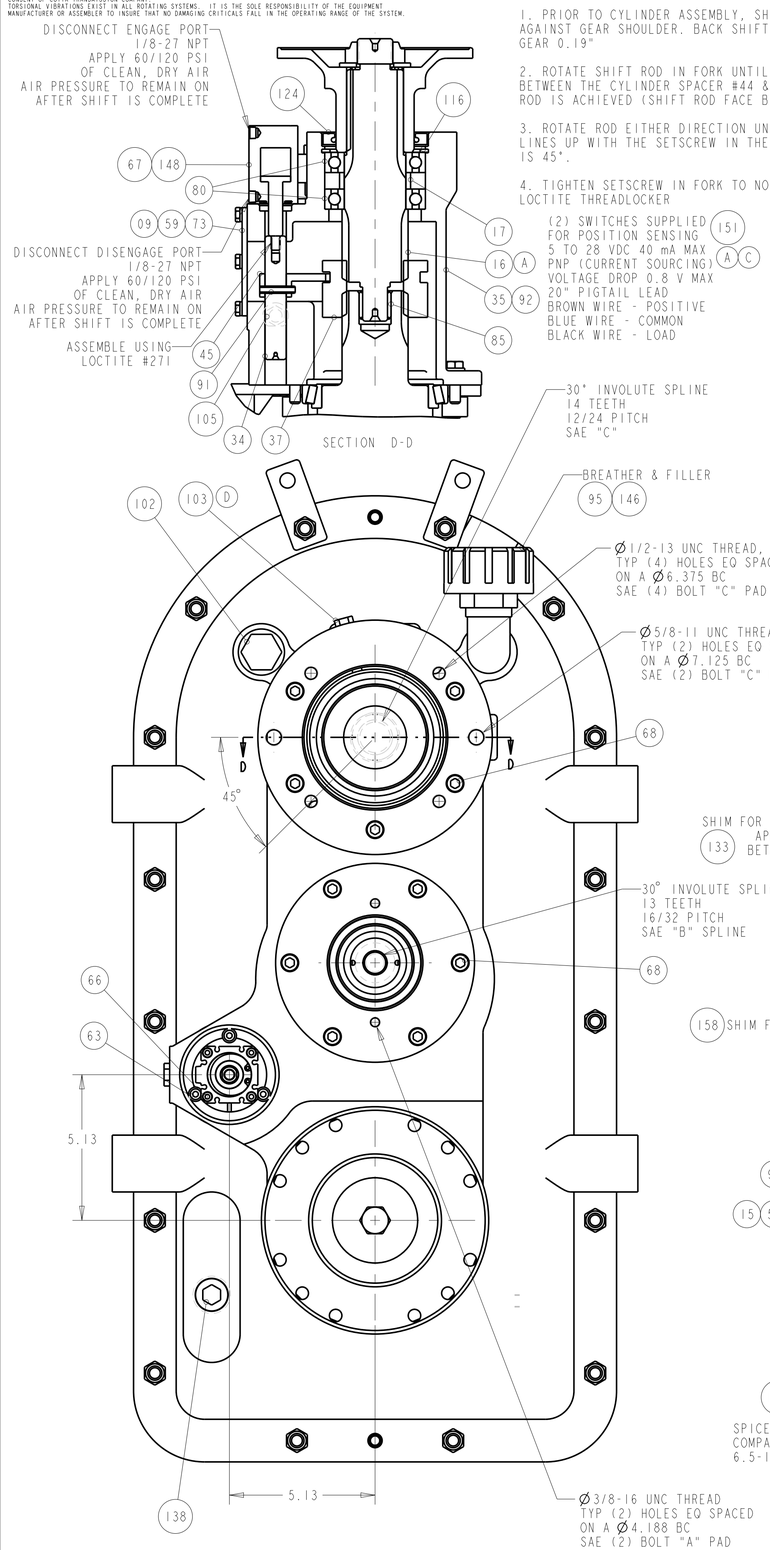

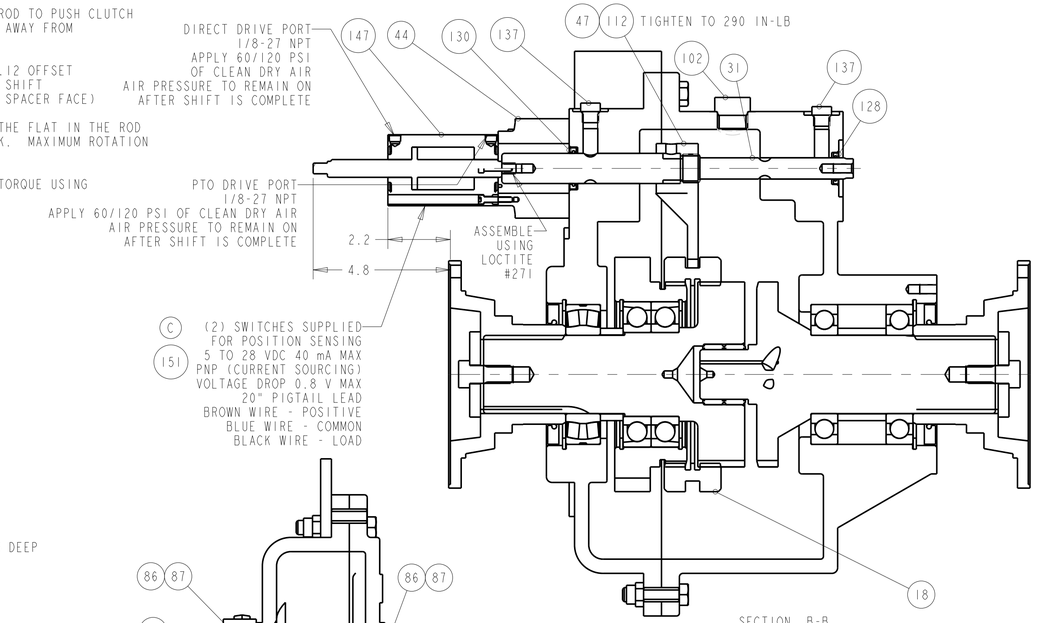

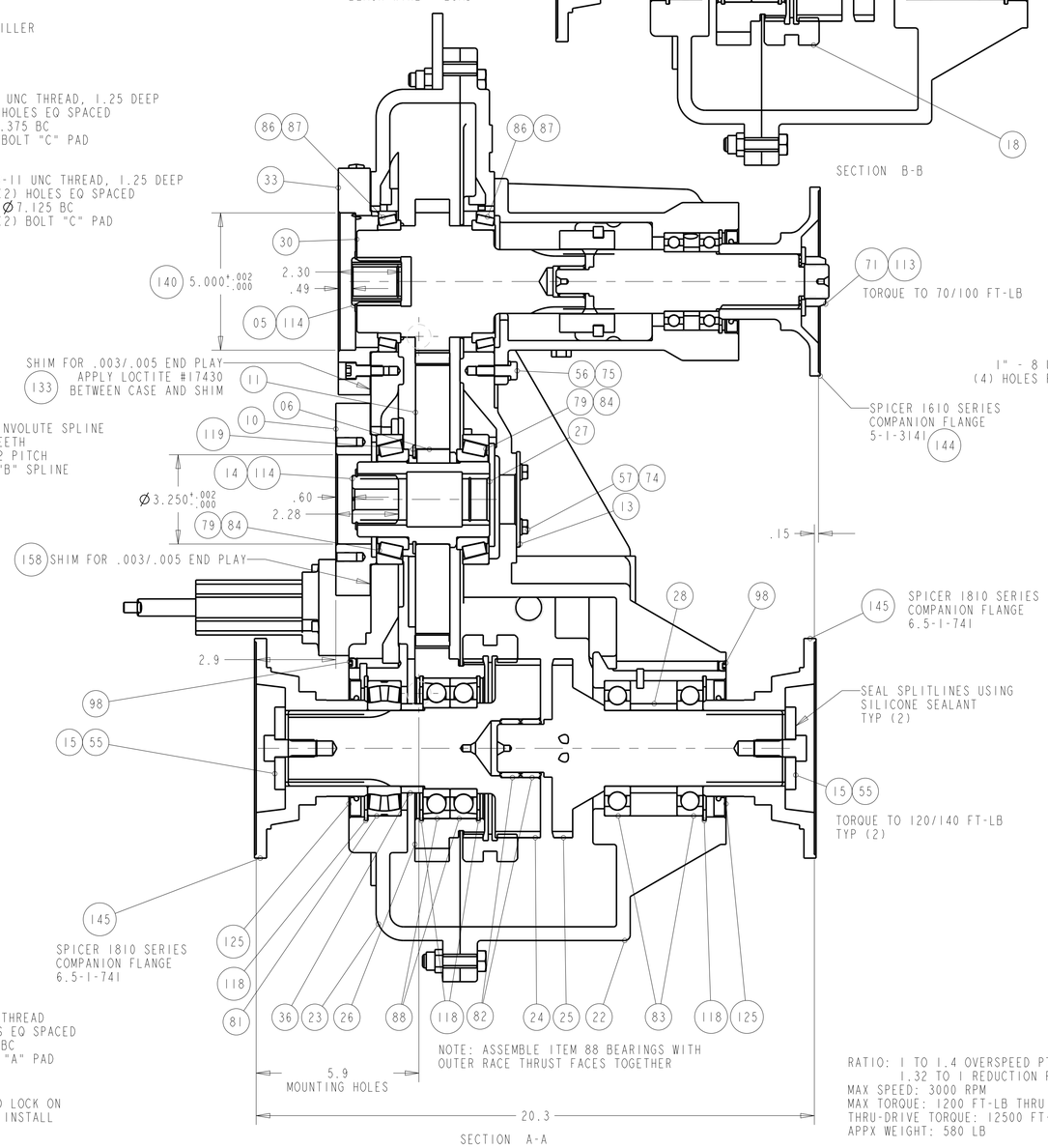

NOTE: ASSEMBLE ITEM 88 BEARINGS WITH OUTER RACE THRUST FACES TOGETHER

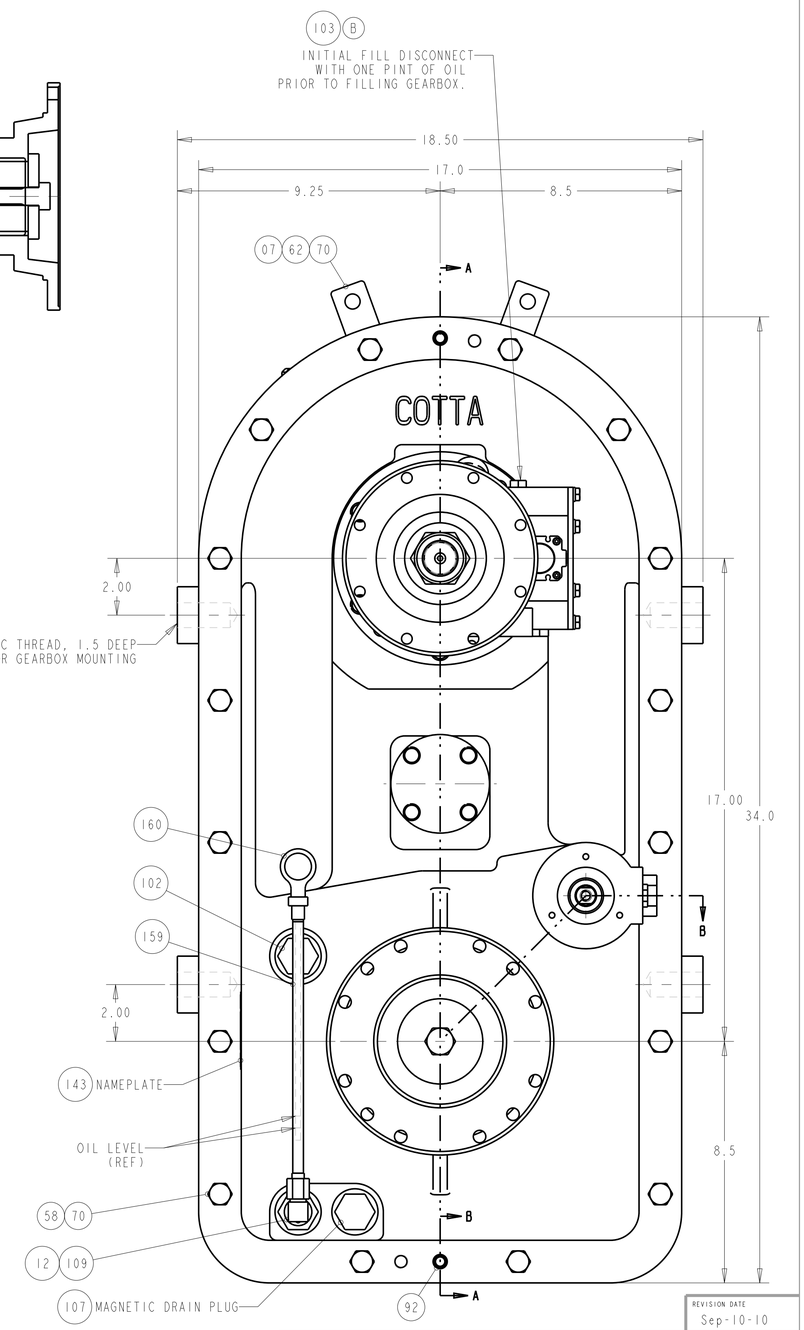

NOTE: INSTALL LOCTITE #17430 OR EQUIVALENT AT ALL MACHINED SPLITLINES UNLESS A GASKET IS FURNISHED. SEAL ALL NON-MACHINED INTERFACES WITH SILICONE SEALANT.

INSTALL LOCTITE THREAD LOCK ON ALL FASTENERS USED TO INSTALL ITEMS 10, 13, 33 & 35

RATIO: 1 TO 1.4 OVERSPEED PTO TOP
1.32 TO 1 REDUCTION PTO MIDDLE
MAX SPEED: 3000 RPM
MAX TORQUE: 1200 FT-LB THRU GEARS
THRU-DRIVE TORQUE: 12500 FT-LB
APPX WEIGHT: 580 LB

MODEL TR2238		COTTA TRANSMISSION COMPANY, LLC 1301 PRINCE HALL DRIVE BELOIT, WI 53511	REVISION DATE Sep-10-10
DRAWN AJS	DATE 24-Oct-07	PART NAME SPLIT SHAFT PTO	
CHECKED SJO	DATE 24-Oct-07		
APPROVED	DATE		
SCALE 0.375	SHEET 1 OF 1	PART NUMBER TR2238-9	
DIMENSIONS ARE IN INCHES			